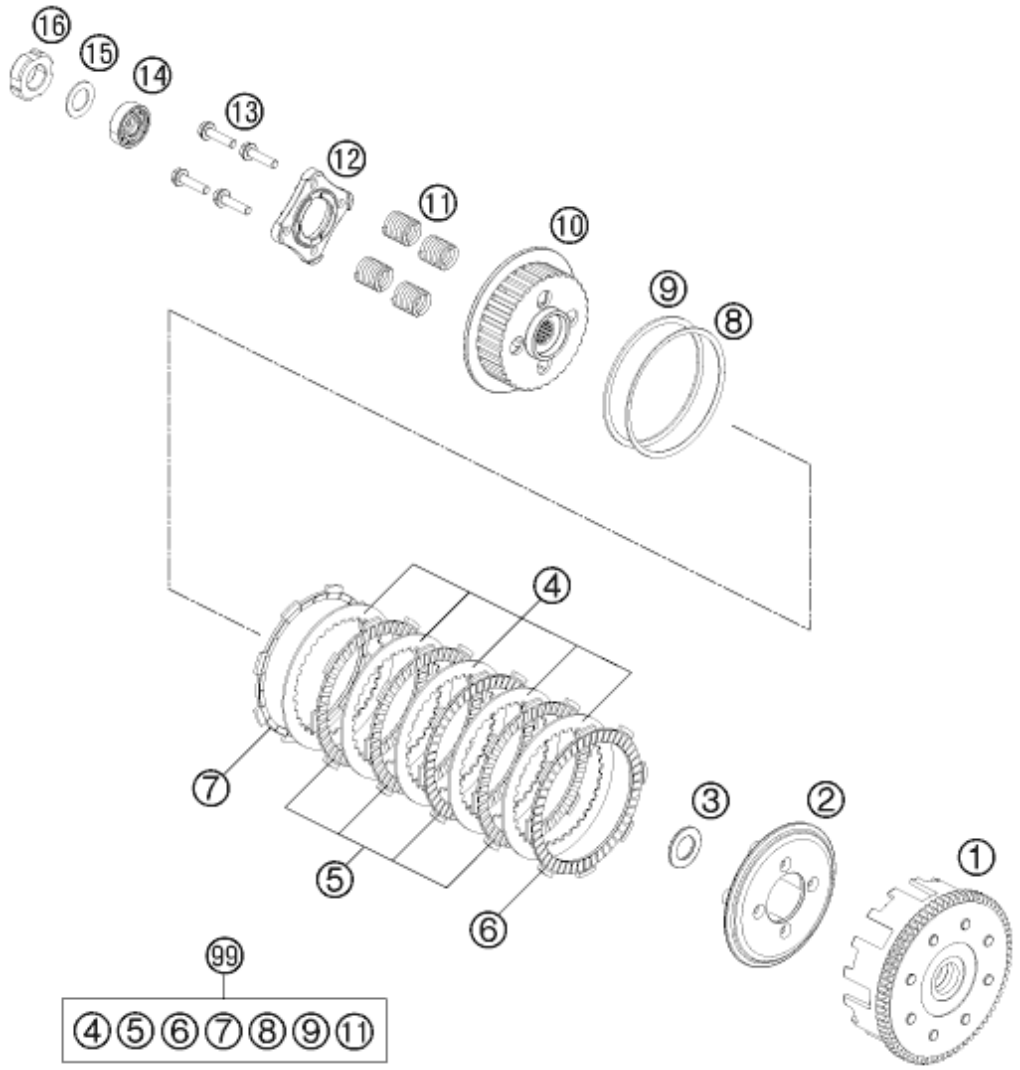


| Pos | Part Number | Description | Additional Text | Quantity |
|---|---|---|---|---|
| 1 | 90632001044 | OUTER CLUTCH HUB CPL. | | 1.00 |
| 2 | 90132003000 | PRESSURE CAP | | 1.00 |
| 3 | 90132020000 | STOP DISK | | 1.00 |
| 4 | 90132010000 | INTERMEDI. DISC | | 5.00 |
| 5 | 90132011000 | LINING DISK | | 4.00 |
| 6 | 90132111000 | LINING DISK INSIDE | | 1.00 |
| 7 | 90132211000 | LINING DISC TURNED OFF | | 1.00 |
| 8 | 90132034000 | BELLEVILLE SPRING | | 1.00 |
| 9 | 90132035000 | SUPPORT RING | | 1.00 |
| 10 | 90632002000 | INNER CLUTCH HUB | | 1.00 |
| 11 | 90632005000 | CLUTCH SPRING | | 4.00 |
| 12 | 90132006000 | PRESSURE PLATE | | 1.00 |
| 13 | 90132001001 | COLLAR SCREW 6X25 | | 4.00 |
| 14 | 90132095000 | CLUTCH LIFTER BEARING | | 1.00 |
| 15 | 90632038000 | BELLEVILLE SPRING | | 1.00 |
| 16 | 90132019000 | CLUTCH NUT | | 1.00 |
| 99 | 90632011010 | CLUTCH KIT 200 DUKE 12-15 | | 0.00 |