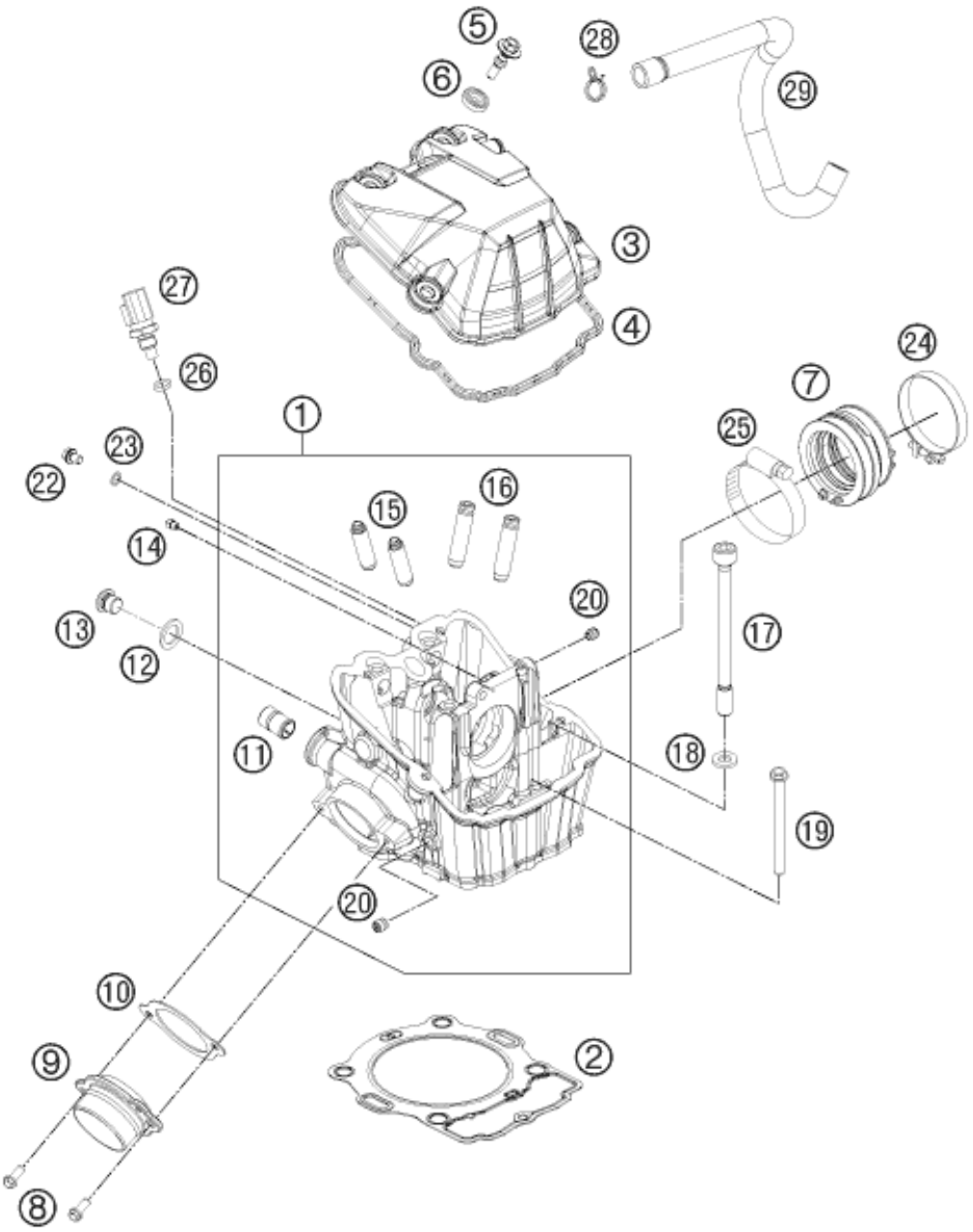

Pos	Part Number	Description	Additional Text	Quantity
1	78136020044	CYLINDER HEAD CPL.		1.00
2	78030036000	CYLINDER HEAD GASKET 08		1.00
3	7803605200033	VALVE COVER BLACK MATT		1.00
4	78036053000	VALVE COVER GASKET		1.00
5	78036054100	VALVE COVER SCREW		4.00
6	75036052010	decoupling element		4.00
7	77236044000	CONNECTION RUBBER EFI		1.00
8	0025060166	HH collar screw M6x16 TX30		2.00
9	78136139000	EXHAUST FLANGE		1.00
10	78036041000	EXHAUST FLANGE GASKET		1.00
11	58030010200	SCREW IN NOZZLE M20X1,5		1.00
12	58038022000	CU-seal ring DIN7603-12X18X1.5		1.00
13	78036024000	PLUG SCREW SAS M12X1,5		1.00
14	60030063070	oil jet 70 M5		1.00

15	77136026001	VALVE GUIDE OUTLET		2.00
16	78136025001	VALVE GUIDE INTAKE		2.00
17	78030044000	CYL. HEAD SCREW M10X1,25 L=125		4.00
18	77336089010	washer 19x10.5x2.5		4.00
19	0025060706	HH COLLAR SCREW M6X70 TX30		1.00
20	59030296000	SCREW PLUG		3.00
22	0025060086	HH collar screw M6x8 TX30		1.00
23	0603061001	CU-SEAL RING DIN7603-6X10X1		1.00
24	61036047000	Hose clamp GEMI 63mm 05		1.00
25	77236048000	Hose clip GEMI 58		1.00
26	0770100020	o-ring 10.00x2.00 silicone	ONLY FOR LC4 ADVENTURE	1.00
27	60011252000	TEMPERAT.-SENSOR WATER LC8 02	ONLY FOR LC4 ADVENTURE	1.00
28	58431082300	CLAMP YDNAC 10173 (18MM)		1.00
29	78130087000	ENGINE BREATHER TUBE		1.00